TEI0015 - Demo ADC data acquisition and Fourier transformation

- Overview
- GUI elements
- Using the demo
  - Module and host pc setup
  - Connecting the input signal

Overview

This demo provides an example on how to use the communication interface provided in the modules firmware to setup the pre-amplification gain and trigger an ADC measurement. This measurement is converted to show it's value over time, and it's Fast Fourier Transformation / frequency spectrum.

The **download** contains the **demo** in a separate folder, a folder with **Setup Notebooks**, the **FPGA Design file** and the **related wiki pages** in pdf format.

The demo consist of two files, one is the Notebook which contains the GUI and the other is a code module, containing the analytical part of the demo. These files must be in the same folder when running the demo. The modules ADC is controlled via the **Intel Max 10** FPGA. In shipment condition, the FPGA is programmed with the necessary **FPGA Design** to run this demo.

The wiki page "**Installation guide for Jupyter**", available via the superior page, describes **how to run Jupyter, install this Notebooks dependencies, open a Notebook** and **execute it.**

Picture of the Notebook

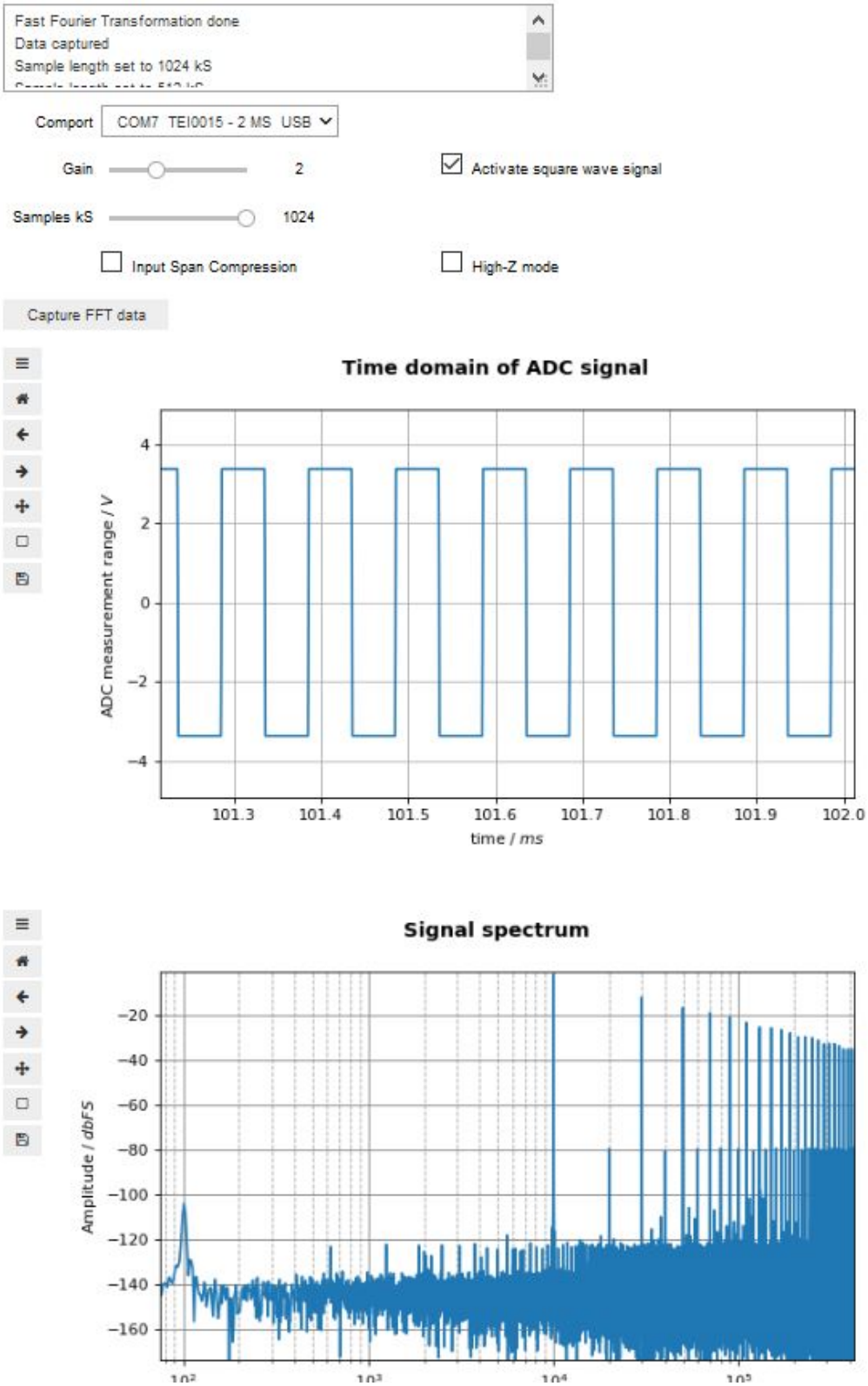
Fast Fourier Transformation done
Data captured
Sample length set to 1024 kS
Comport
COM7 TEI0015 - 2 MS USB
Gain
2
Activate square wave signal
Samples kS
1024
Input Span Compression
High-Z mode
Capture FFT data
Time domain of ADC signal
ADC measurement range / V
time / ms
Signal spectrum
Amplitude / dbFS

GUI elements

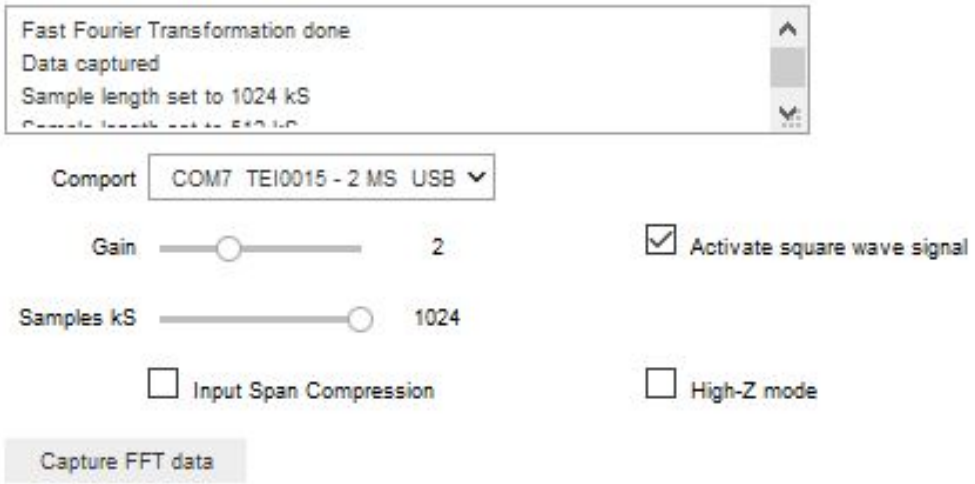

Drop-down List "**Comport**" :
- COM-port list for selecting a COM-port.
Listed are the port, the modules name and its USB ID
During notebook initialization, ports are scanned

Slider "**Gain**" :
Select the pre-amplification gain of the module
Different values in dependency to the module

Slider "**Samples kS**" :
Slider to set the samples to evaluate
Range is from 16 kS to 1024 kS

Check box "**Activate square wave signal**" :
Activates the modules square wave generator
10 kHz, +3.3V, 50% duty cycle, signal available with and without 180° phase shift

Check box "**Input span compression**" :
Mode of the modules ADC in which it's reference voltage is reduced to 80% to give head room in case the supply voltage is near to the reference voltage
Not available on all modules, greyed out / deactivated for these modules

Check box "**High-Z mode**" :
Mode of the modules ADC in which it reduces its current consumption. Not applicable to signal greater then 100 kHz
Not available on all modules, greyed out / deactivated for these modules

Button "**Capture FFT data**" :
Re-applies the appointed GUI values and features to the module and triggers a signal measurement followed by the data conversion and plotting

Using the demo

This demo is designed with the focus of capturing signals. Therefore the module works like a storage oscilloscope.

For every trigger event, the module saves 1 million samples of ADC measurement in its SDRAM. In the Notebook, the user just selects which amount of the data are to be used for the evaluation.

Module and host pc setup

The Notebook displays a graphical user interface in its running state, for setting up the comport, sample parameters, gain and module specific features. The following list describes the setup steps necessary prior to executing the Notebook:

- Connect the module to the host pc
- Apply a signal to the modules inputs:
  Either via SMA- or via Pin Header- connection,
  it is sufficient to use only one of the differential inputs,
  but for the best results, apply the signal via both differential inputs
  (Connection diagrams are in the next chapter)
- Connect the module to the host pc
- Open Jupyter and navigate to the Notebook.
- Place the mouse cursor into the Notebooks cell via left click
- Run the Note by pressing the Run button
  (The demo scans for existing comports in its initialisation phase. So the module needs to be connected to the computer prior to running the demo)
- Enjoy !

Connecting the input signal

Connecting the square wave generator to the modules inputs

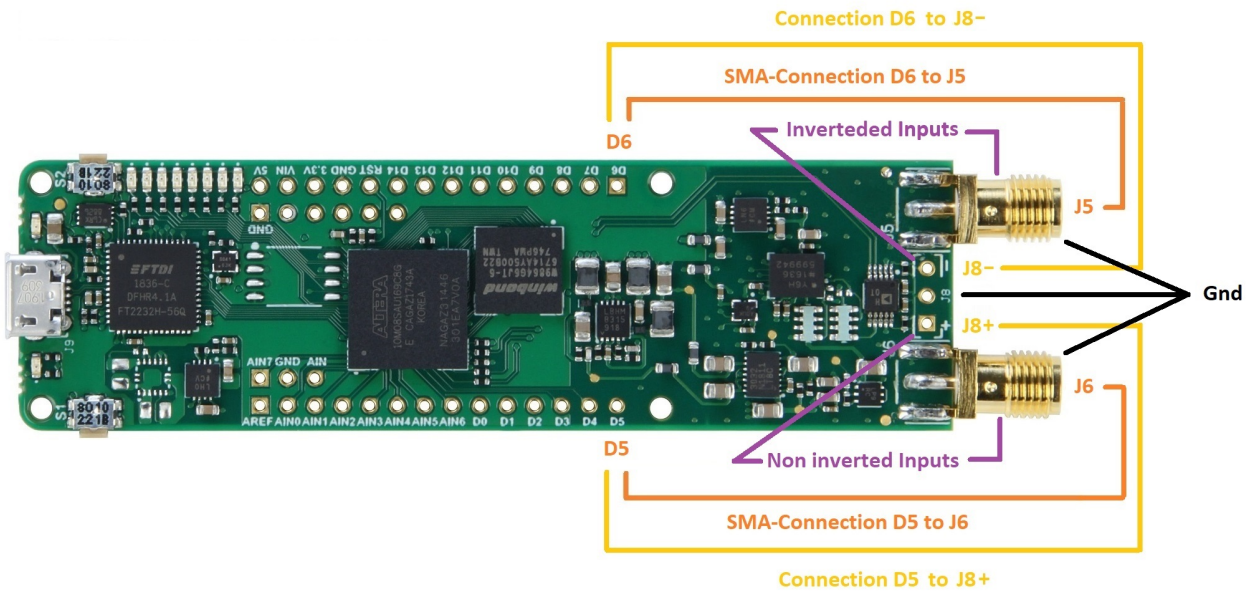

Appling a signal to the modules inputs

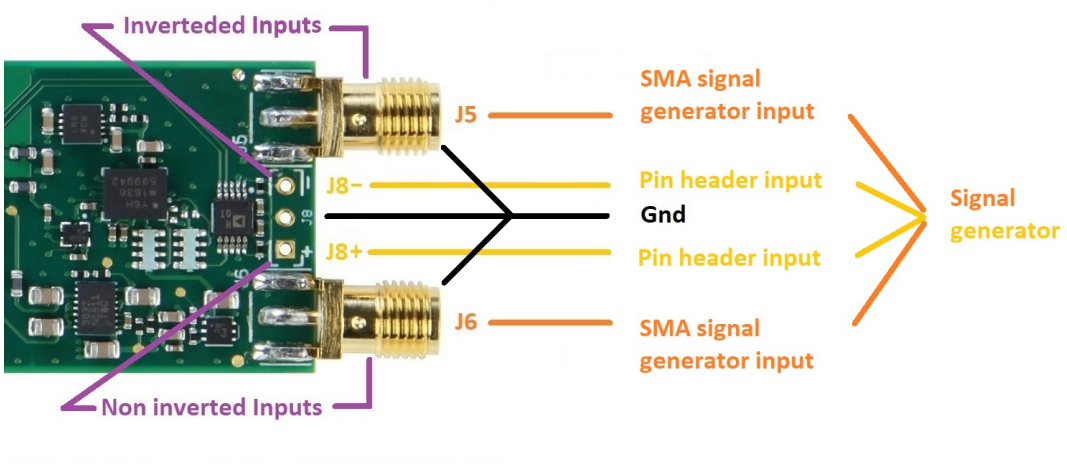
Inverteded Inputs
J5
SMA signal generator input
J8−
Pin header input
Gnd
J8+
Pin header input
J6
SMA signal generator input
Signal generator
Non inverted Inputs