PCN-20210610 TE0720-03 eMMC Change

Download PDF version of this document.

Company	Trenz Electronic GmbH
PCN Number	PCN-20210610
Title	TE0720-03 eMMC Change
Subject	BOM change
Issue Date	2021-07-12

Products Affected

This change affects all Trenz Electronic TE0720 SoMs of revision 03 with eMMC from manufacturer ISSI:

Affected Product	eMMC Capacity	Replacement
TE0720-03-31C33FA	8GB	TE0720-03-31C33MA
TE0720-03-61C33FA	8GB	TE0720-03-61C33MA
TE0720-03-61Q33FA	8GB	TE0720-03-61Q33MA
TE0720-03-61Q33FAB	8GB	TE0720-03-S005
TE0720-03-61Q33FAD	8GB	TE0720-03-S006C1
TE0720-03-61Q33FAE	8GB	TE0720-03-S007C1
TE0720-03-61Q33FAF	8GB	TE0720-03-S008C1
TE0720-03-61Q33FAG	8GB	TE0720-03-S009C1
TE0720-03-61Q33FL	8GB	TE0720-03-61Q33ML
TE0720-03-61Q42GA	32GB	TE0720-03-61Q42NA
TE0720-03-61Q43FA	8GB	TE0720-03-61Q43MA
TE0720-03-62I33FA	8GB	TE0720-03-62I33MA
TE0720-03-62I33GA	32GB	TE0720-03-62I33NA
TE0720-03-62I33FAN	8GB	TE0720-03-62I33MAN
TE0720-03-62I33FL	8GB	TE0720-03-62I33ML
TE0720-03-64I63FA	8GB	TE0720-03-64I63MA
TE0720-03-61C33FAS	8GB	TE0720-03-61C33MAS
TE0720-03-S001C1	8GB	TE0720-03-S003C1
TE0720-03-S002	8GB	TE0720-03-S004

Changes

#1 Change eMMC (U15) from IS21ES08G-JCLI / IS21ES32G-JCLI to SDINBDG4-8G-XI2 / SDINBDG4-32G-XI2

Type: BOM change
Reason: Parts are EOL.
Impact: None. Replacement has same capacity as used on corresponding affected variant. Reference designs for vivado versions 2019.2 and 2020.2 were tested and work properly without any changes.

#2 Change Ferrite Beads (L1, L2, L3, L4, L5, L7, L8) BKP0603HS121-T to MPZ0603S121HT000

Type: BOM change
Reason: Part is NRND and EOL announced.
Impact: None. DC resistance decreased from 150mOhm to 130mOhm, rated current increased from 0.85A to 1A.

Method of Identification

Locate eMMC (U15) on top side of PCB:

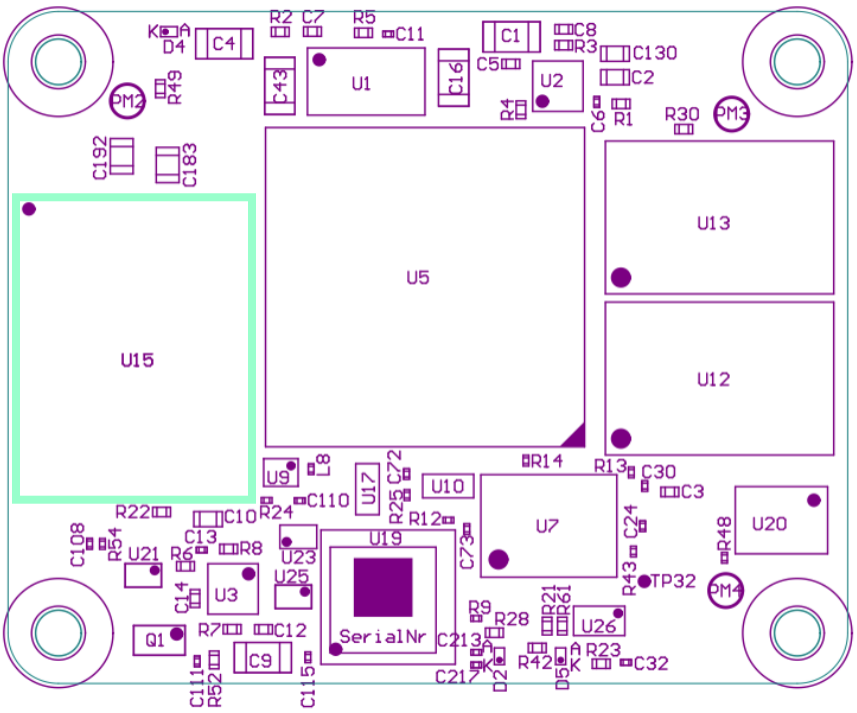

old	new

IS21ES08G-JCLI or IS21ES32G-JCLI	SDINBDG4-8G-XI2 or SDINBDG4-32G-XI2

Remark: 8GB versions are shown in figures above, chip marking of 32GB version looks accordingly.

Production Shipment Schedule

From August 2021, after old stock is gone, all variants above are replaced by the corresponding variants.

Contact Information

If you have any questions related to this PCN, please contact Trenz Electronics Technical Support at

- forum.trenz-electronic.de
- wiki.trenz-electronic.de
- support%trenz-electronic.de (subject = PCN-20210610)
- phone
    - national calls: 05741 3200-0
    - international calls: +49 5741 3200-0

Disclaimer

Any projected dates in this PCN are based on the most current product information at the time this PCN is being issued, but they may change due to unforeseen circumstances. For the latest schedule and any other information, please contact your local Trenz Electronic sales office, technical support or local distributor.