TE0890 Test Board

Table of contents

Overview

Refer to https://wiki.trenz.org/te0890-info for the current online version of this manual and other available documentation.

Key Features

- Vitis/Vivado 2022.2
- MicroBlaze
- UART
- QSPI Flash
- HyperRAM
- user LEDs
- SPI ELF Bootloader

Revision History

Date	Vivado	Project Built	Authors	Description
2023-05-23	2022.2	TE0890-test_board_noprebuilt-vivado_2022.2-build_0_20230523150839.zip TE0890-test_board-vivado_2022.2-build_0_20230523150839.zip	Waldemar Hanemann	• initial release

Design Revision History

Release Notes and Know Issues

Issues	Description	Workaround	To be fixed version
No known issues	---	---	---

Known Issues

Requirements

Software

Software	Version	Note
Vitis	2022.2	needed, Vivado is included into Vitis installation

Software

Hardware

Basic description of TE Board Part Files is available on TE Board Part Files.

Complete List is available on "<project folder>\board_files*_board_files.csv"

Design supports following modules:

Module Model	Board Part Short Name	PCB Revision Support	DDR	QSPI Flash	EMMC	Others	Notes
TE0890-01-P1C-5-A*	25_1ca	REV01	HyperRAM 8MB	8MB	---	---	
TE0890-01-S001	25_1ca	REV01	HyperRAM 8MB	8MB	---	---	

*used as reference

Hardware Modules

Additional HW Requirements:

Additional Hardware	Notes
USB Cable for JTAG/UART	Check Programmer for correct type
XMOD Programmer	special connection adapter necessary

*used as reference

Additional Hardware

Content

For general structure and usage of the reference design, see Project Delivery - AMD devices

Design Sources

Type	Location	Notes
Vivado	<project folder>\block_design <project folder>\constraints <project folder>\ip_lib <project folder>\board_files	Vivado Project will be generated by TE Scripts
Vitis	<project folder>\sw_lib	Additional Software Template for Vitis and apps_list.csv with settings automatically for Vitis app generation

Design sources

Additional Sources

--

Prebuilt

File	File-Extension	Description
BIF-File	*.bif	File with description to generate Bin-File
BIN-File	*.bin	Flash Configuration File with Boot-Image (Zynq-FPGAs)
BIT-File	*.bit	FPGA (PL Part) Configuration File
Boot Script-File	*.scr	Distro Boot Script file
DebugProbes-File	*.ltx	Definition File for Vivado/Vivado Labtools Debugging Interface
Debian SD-Image	*.img	Debian Image for SD-Card
Diverse Reports	---	Report files in different formats
Device Tree	*.dts	Device tree (2 possible, one for u-boot and one for linux)
Hardware-Platform-Description-File	*.xsa	Exported Vivado hardware description file for Vitis and PetaLinux
LabTools Project-File	*.lpr	Vivado Labtools Project File
MCS-File	*.mcs	Flash Configuration File with Boot-Image (MicroBlaze or FPGA part only)
MMI-File	*.mmi	File with BRAM-Location to generate MCS or BIT-File with *.elf content (MicroBlaze only)
OS-Image	*.ub	Image with Linux Kernel (On Petalinux optional with Devicetree and RAM-Disk)
Software-Application-File	*.elf	Software Application for Zynq or MicroBlaze Processor Systems
SREC-File	*.srec	Converted Software Application for MicroBlaze Processor Systems

Prebuilt files (only on ZIP with prebuilt content)

Download

Reference Design is only usable with the specified Vivado/Vitis/PetaLinux version. Do never use different Versions of Xilinx Software for the same Project.

Reference Design is available on:

- TE0890 "Test Board" Reference Design

Design Flow

Reference Design is available with and without prebuilt files. It's recommended to use TE prebuilt files for first launch.

Trenz Electronic provides a tcl based built environment based on Xilinx Design Flow.

See also:

- AMD Development Tools#XilinxSoftware-BasicUserGuides
- Vivado Projects - TE Reference Design
- Project Delivery.

The Trenz Electronic FPGA Reference Designs are TCL-script based project. Command files for execution will be generated with "_create_win_setup.cmd" on Windows OS and "_create_linux_setup.sh" on Linux OS.

TE Scripts are only needed to generate the vivado project, all other additional steps are optional and can also executed by Xilinx Vivado/Vitis GUI. For currently Scripts limitations on Win and Linux OS see: Project Delivery Currently limitations of functionality

> ⚠ **Caution!** Win OS has a 260 character limit for path lengths which can affect the Vivado tools. To avoid this issue, use Virtual Drive or the shortest possible names and directory locations for the reference design (for example "x:\<project folder>")

1. Run _create_win_setup.cmd/_create_linux_setup.sh and follow instructions on shell:

_create_win_setup.cmd/_create_linux_setup.sh

```
------------------------Set design paths---------------------------
-- Run Design with: _create_win_setup
-- Use Design Path: <absolute project path>
-------------------------------------------------------------------
------------------------TE Reference
Design---------------------------
-------------------------------------------------------------------
-- (0)  Module selection guide, project creation...prebuilt export...
-- (1)  Create minimum setup of CMD-Files and exit Batch
-- (2)  Create maximum setup of CMD-Files and exit Batch
-- (3)  (internal only) Dev
-- (4)  (internal only) Prod
-- (c)  Go to CMD-File Generation (Manual setup)
-- (d)  Go to Documentation (Web Documentation)
-- (g)  Install Board Files from Xilinx Board Store (beta)
-- (a)  Start design with unsupported Vivado Version (beta)
-- (x)  Exit Batch (nothing is done!)
----
Select (ex.:'0' for module selection guide):
```

2. Press 0 and enter to start "Module Selection Guide"
3. Create project and follow instructions of the product selection guide, settings file will be configured automatically during this process.
    - optional for manual changes: Select correct device and Xilinx install path on "design_basic_settings.cmd" and create Vivado project with "vivado_create_project_guimode.cmd"

    > ⚠ Note: Select correct one, see also Vivado Board Part Flow

4. Create hardware description file (.xsa file) and export to prebuilt folder

run on Vivado TCL (Script generates design and export files into "<project folder>\prebuilt\hardware\<short name>")

```
TE::hw_build_design -export_prebuilt
```

> Using Vivado GUI is the same, except file export to prebuilt folder.

5. Generate Programming Files with Vitis

run on Vivado TCL (Script generates applications and bootable files, which are defined in "test_board\sw_lib\apps_list.csv")

```
TE::sw_run_vitis -all
TE::sw_run_vitis (optional; Start Vitis from Vivado GUI or start
with TE Scripts on Vivado TCL)
```

> TCL scripts generate also platform project, this must be done manually in case GUI is used. See Vitis

Launch

Programming

> Check Module and Carrier TRMs for proper HW configuration before you try any design.
>
> Reference Design is also available with prebuilt files. It's recommended to use TE prebuilt files for first launch.

Xilinx documentation for programming and debugging: Vivado/Vitis/SDSoC-Xilinx Software Programming and Debugging

Get prebuilt boot binaries

1. Run _create_win_setup.cmd/_create_linux_setup.sh and follow instructions on shell
2. Press 0 and enter to start "Module Selection Guide"
    a. Select assembly version
    b. Validate selection
    c. Select create and open delivery binary folder

> Note: Folder "<project folder>_binaries_<Article Name>" with subfolder "boot_<app name>" for different applications will be generated

QSPI-Boot mode

Option for **hello_te0890.mcs** on QSPI Flash.

1. Connect **JTAG** and power on carrier with module
2. Open Vivado Project with "vivado_open_existing_project_guimode.cmd" or if not created, create with "vivado_create_project_guimode.cmd"

run on Vivado TCL (Script programs hello_te0890.mcs on QSPI flash)
`TE::pr_program_flash -swapp hello_te0890`

3. Set Boot Mode to **QSPI-Boot.**
    - Depends on Carrier, see carrier TRM.

SD-Boot mode

Not used on this example.

JTAG

Not used on this example.

Usage

1. Prepare HW like described on section Programming
2. Connect UART USB (most cases same as JTAG)
3. Select QSPI as Boot Mode

> Note: See TRM of the Carrier, which is used.

4. Power On PCB

    1. FPGA Loads Bitfile(spi bootloader included) from Flash

    2. The spi bootloader transfers the hello_te0890.elf application from spi address 0x005e0000 to RAM for execution

    3. Hello Trenz will be run on UART console for 10 minutes.

    info: Do not reboot, if Bitfile programming over JTAG is used as programming method.

    a. ## UART

    Open Serial Console (e.g. putty)

    i. Speed: 9600

ii. COM Port: Win OS, see device manager, Linux OS see dmesg |grep tty (UART is *USB1)

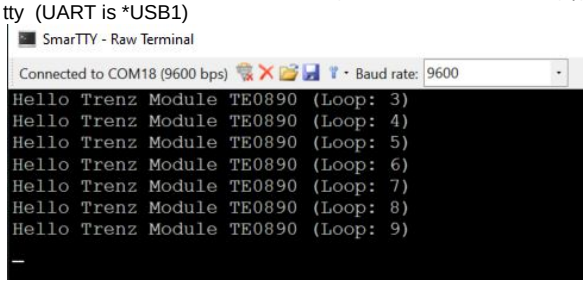

Vivado HW Manager

Open Vivado HW-Manager and add VIO signal to dashboard (*.ltx located on prebuilt folder)

- Control:
  - LED2 (green LED) (the red LED1 can be controlled from software hello_te0890)
  - reset MicroBlaze (active low)
- Monitoring:
  - Reset of Periphery and MicroBlaze

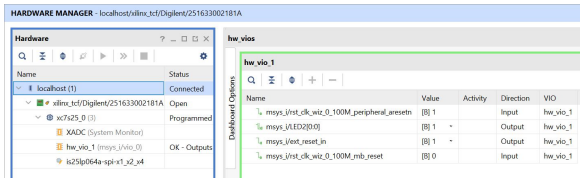

Vivado Hardware Manager

System Design - Vivado

Block Design

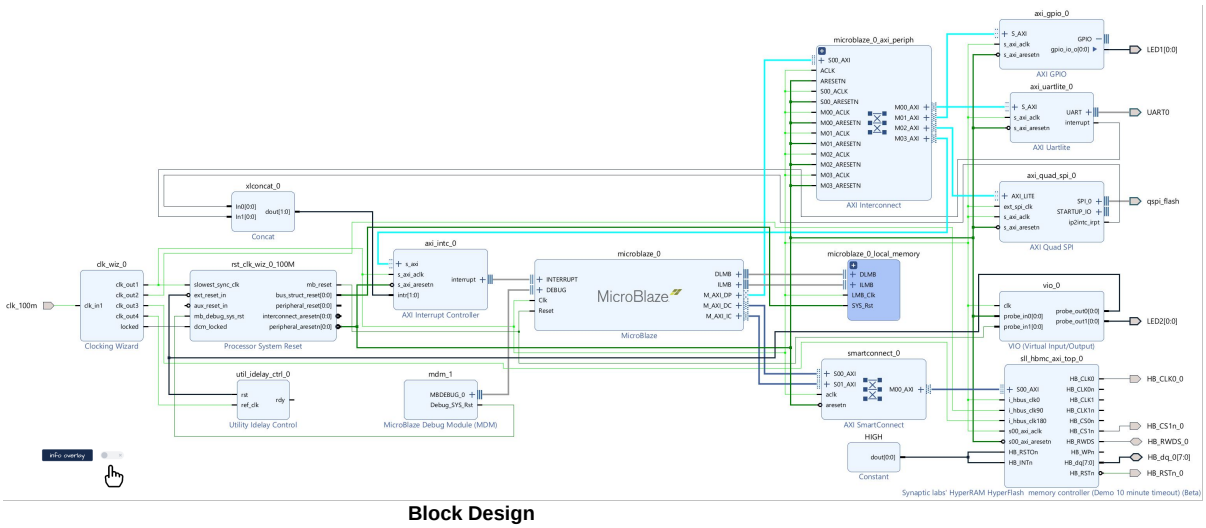

Block Design

PS Interfaces

Constraints

Basic module constraints

_i_bitgen_common.xdc

```
set_property BITSTREAM.GENERAL.COMPRESS TRUE [current_design]
set_property BITSTREAM.CONFIG.CONFIGRATE 66 [current_design]
set_property CONFIG_VOLTAGE 3.3 [current_design]
set_property CFGBVS VCCO [current_design]
set_property CONFIG_MODE SPIx1 [current_design]
set_property BITSTREAM.CONFIG.SPI_32BIT_ADDR NO [current_design]
set_property BITSTREAM.CONFIG.SPI_BUSWIDTH 1 [current_design]
set_property BITSTREAM.CONFIG.M1PIN PULLNONE [current_design]
set_property BITSTREAM.CONFIG.M2PIN PULLNONE [current_design]
set_property BITSTREAM.CONFIG.M0PIN PULLNONE [current_design]

set_property BITSTREAM.CONFIG.USR_ACCESS TIMESTAMP [current_design]
```

_i_bitgen.xdc

```
set_property BITSTREAM.CONFIG.UNUSEDPIN PULLDOWN [current_design]
#
#
#
```

Design specific constraints

_i_io.xdc

```
set_property PACKAGE_PIN L5 [get_ports clk_100m]
set_property IOSTANDARD LVCMOS33 [get_ports clk_100m]

set_property IOSTANDARD LVCMOS33 [get_ports {LED1[0]}]
set_property IOSTANDARD LVCMOS33 [get_ports {LED2[0]}]
set_property PACKAGE_PIN D14 [get_ports {LED1[0]}]
set_property PACKAGE_PIN C14 [get_ports {LED2[0]}]
```

_i_hyperram.xdc

```
set_property PACKAGE_PIN N1 [get_ports HB_CLK0_0]
#set_property PACKAGE_PIN A14 [get_ports HB_CLK0n_0]

set_property PACKAGE_PIN P11 [get_ports {HB_dq_0[0]}]
set_property PACKAGE_PIN P12 [get_ports {HB_dq_0[1]}]
set_property PACKAGE_PIN N4 [get_ports {HB_dq_0[2]}]
set_property PACKAGE_PIN P10 [get_ports {HB_dq_0[3]}]
set_property PACKAGE_PIN P5 [get_ports {HB_dq_0[4]}]
set_property PACKAGE_PIN N10 [get_ports {HB_dq_0[5]}]
set_property PACKAGE_PIN N11 [get_ports {HB_dq_0[6]}]
```

```
set_property PACKAGE_PIN P13 [get_ports {HB_dq_0[7]}]


set_property PACKAGE_PIN P4 [get_ports HB_RWDS_0]

set_property PACKAGE_PIN P2 [get_ports HB_CS1n_0]
set_property PACKAGE_PIN P3 [get_ports HB_RSTn_0]

#set_property PACKAGE_PIN A18 [get_ports HB_CS0n_0 ]
#set_property PACKAGE_PIN J18 [get_ports HB_INTn_0 ]
#set_property PACKAGE_PIN C17 [get_ports HB_RSTOn_0]


#
# FPGA Pin Voltage assignment
#
set_property IOSTANDARD LVCMOS33 [get_ports HB_CLK0_0]
#set_property IOSTANDARD LVCMOS33 [get_ports HB_CLK0n_0]
set_property IOSTANDARD LVCMOS33 [get_ports {HB_dq_0[*]}]
set_property IOSTANDARD LVCMOS33 [get_ports HB_CS1n_0]
set_property IOSTANDARD LVCMOS33 [get_ports HB_RSTn_0]
set_property IOSTANDARD LVCMOS33 [get_ports HB_RWDS_0]

#set_property IOSTANDARD LVCMOS18 [get_ports HB_CS0n_0]
#set_property IOSTANDARD LVCMOS18 [get_ports HB_INTn_0]
#set_property IOSTANDARD LVCMOS18 [get_ports HB_RSTOn_0]

#set_property PULLUP true [get_ports HB_RSTOn_0]
#set_property PULLUP true [get_ports HB_INTn_0]

#
#Hyperbus Clock - change according to clk pin on PLL
#
#create_generated_clock -name clk_0   -source [get_pins msys_i/clk_wiz_0
/inst/mmcm_adv_inst/CLKIN1] -master_clock clk_100m [get_pins msys_i
/clk_wiz_0/inst/mmcm_adv_inst/CLKOUT0]
#create_generated_clock -name clk_90  -source [get_pins msys_i/clk_wiz_0
/inst/mmcm_adv_inst/CLKIN1] -master_clock clk_100m [get_pins msys_i
/clk_wiz_0/inst/mmcm_adv_inst/CLKOUT1]
#create_generated_clock -name clk_180 -source [get_pins msys_i/clk_wiz_0
/inst/mmcm_adv_inst/CLKIN1] -master_clock clk_100m [get_pins msys_i
/clk_wiz_0/inst/mmcm_adv_inst/CLKOUT2]

#
#100Mhz clock freqeuncy - change accordingly
#



#
#Create RDS clock and RDS virtual clock
#
create_clock -period 10.000 -name rwds_clk [get_ports HB_RWDS_0]
create_clock -period 10.000 -name virt_rwds_clk

#
#Input Delay Constraint -  HB_RWDS-HB_DQ
#
set_input_delay -clock [get_clocks virt_rwds_clk] -max 0.500 [get_ports
{HB_dq_0[*]}]
set_input_delay -clock [get_clocks virt_rwds_clk] -clock_fall -max -
```

```
add_delay 0.500 [get_ports {HB_dq_0[*]}]

set_input_delay -clock [get_clocks virt_rwds_clk] -min -add_delay -0.500
[get_ports {HB_dq_0[*]}]
set_input_delay -clock [get_clocks virt_rwds_clk] -clock_fall -min -
add_delay -0.500 [get_ports {HB_dq_0[*]}]

set_multicycle_path -setup -end -rise_from [get_clocks virt_rwds_clk] -
rise_to [get_clocks rwds_clk] 0
set_multicycle_path -setup -end -fall_from [get_clocks virt_rwds_clk] -
fall_to [get_clocks rwds_clk] 0

set_false_path -setup -fall_from [get_clocks virt_rwds_clk] -rise_to
[get_clocks rwds_clk]
set_false_path -setup -rise_from [get_clocks virt_rwds_clk] -fall_to
[get_clocks rwds_clk]
set_false_path -hold -fall_from [get_clocks virt_rwds_clk] -fall_to
[get_clocks rwds_clk]
set_false_path -hold -rise_from [get_clocks virt_rwds_clk] -rise_to
[get_clocks rwds_clk]

#set_false_path -from [get_clocks clk_0] -to [get_clocks rwds_clk]
#set_false_path -from [get_clocks rwds_clk] -to [get_clocks clk_0]

set_false_path -from [get_clocks rwds_clk] -to [get_clocks -of_objects
[get_pins msys_i/clk_wiz_0/inst/mmcm_adv_inst/CLKOUT0]]
set_false_path -from [get_clocks -of_objects [get_pins msys_i/clk_wiz_0
/inst/mmcm_adv_inst/CLKOUT0]] -to [get_clocks rwds_clk]

#
#Output Delay Constraint -  HB_CLK0-HB_DQ
#

create_generated_clock -name HB_CLK0_0 -source [get_pins {*/*/*/U_IO/U_CLK0
/dq_idx_[0].ODDR_inst/C}] -multiply_by 1 -invert [get_ports HB_CLK0_0]

set_output_delay -clock [get_clocks HB_CLK0_0] -min -1.000 [get_ports
{HB_dq_0[*]}]
set_output_delay -clock [get_clocks HB_CLK0_0] -max 1.000 [get_ports
{HB_dq_0[*]}]
set_output_delay -clock [get_clocks HB_CLK0_0] -clock_fall -min -add_delay
-1.000 [get_ports {HB_dq_0[*]}]
set_output_delay -clock [get_clocks HB_CLK0_0] -clock_fall -max -add_delay
1.000 [get_ports {HB_dq_0[*]}]


set_false_path -from [get_pins */*/*/U_HBC/*/dq_io_tri_reg/C] -to
[get_ports {HB_dq_0[*]}]

#set_false_path -from * -to [get_pins */*/inst/*/i_iavs0_270_rstn_1_reg
/CLR]
#set_false_path -from * -to [get_pins */*/inst/*/i_iavs0_270_rstn_2_reg
/CLR]
#set_false_path -from * -to [get_pins */*/inst/*/i_iavs0_270_rstn_3_reg
/CLR]
```

_i_timing.xdc

```
set_property CLOCK_DEDICATED_ROUTE FALSE [get_nets clk_100m]
```

Software Design - Vitis

For Vitis project creation, follow instructions from:

Vitis

Application

Template location: "<project folder>\sw_lib\sw_apps\"

Hello TE0890

Trenz Hello World example as endless loop

Template location: \sw_lib\sw_apps\hello_te0890

The printed Text and the blinking of the red LED1 can be modified

spi_bootloader

TE modified SPI Bootloader from Henrik Brix Andersen.

Bootloader to load app or second bootloader from flash into DDR.

Here it loads the hello_te0890.elf from QSPI-Flash to RAM.

Descriptions:

- Modified Files: bootloader.c
- Changes:
  - Change the SPI defines in the header
  - Add some reiteration in the frist spi read call

Additional Software

No additional software is needed.

App. A: Change History and Legal Notices

Document Change History

To get content of older revision go to "Change History" of this page and select older document revision number.

Date	Document Revision	Authors	Description	

Error rendering macro 'page-info' Ambiguous method overloading for method jdk.proxy241.$Proxy3496#hasContentLevelP	**Error rendering macro 'page-info'** Ambiguous method overloading for method jdk.proxy241.$Proxy3496#hasContentLevelP	**Error rendering macro 'page-info'** Ambiguous method overloading for method jdk.proxy241.$Proxy3496#hasContentLevelP		• initial release

erm issi on. Ca nno t res olv e whi ch met hod to inv oke for [nul l, clas s jav a. lan g. Stri ng, clas s co m. atla ssia n. con flue nce . pag

erm issi on. Ca nno t res olv e whi ch met hod to inv oke for [nul l, clas s jav a. lan g. Stri ng, clas s co m. atla ssia n. con flue nce . pag

erm issi on. Ca nno t res olv e whi ch met hod to inv oke for [nul l, clas s jav a. lan g. Stri ng, clas s co m. atla ssia n. con flue nce . pag

es.
Pag
e]
due
to
ove
rlap
pin
g
prot
oty
pes
bet
we
en:
[int
erfa
ce
co
m.
atla
ssia
n.
con
flue
nce
.
use
r.
Co
nflu
enc
eUs
er,
clas
s
jav
a.
lan

es.
Pag
e]
due
to
ove
rlap
pin
g
prot
oty
pes
bet
we
en:
[int
erfa
ce
co
m.
atla
ssia
n.
con
flue
nce
.
use
r.
Co
nflu
enc
eUs
er,
clas
s
jav
a.
lan

es.
Pag
e]
due
to
ove
rlap
pin
g
prot
oty
pes
bet
we
en:
[int
erfa
ce
co
m.
atla
ssia
n.
con
flue
nce
.
use
r.
Co
nflu
enc
eUs
er,
clas
s
jav
a.
lan

g.
Stri
ng,
clas
s
co
m.
atla
ssia
n.
con
flue
nce
.
cor
e.
Co
nte
ntE
ntit
yO
bje
ct]
[int
erfa
ce
co
m.
atla
ssia
n.
use
r.
Use
r,
clas
s
jav
a.

g.
Stri
ng,
clas
s
co
m.
atla
ssia
n.
con
flue
nce
.
cor
e.
Co
nte
ntE
ntit
yO
bje
ct]
[int
erfa
ce
co
m.
atla
ssia
n.
use
r.
Use
r,
clas
s
jav
a.

g.
Stri
ng,
clas
s
co
m.
atla
ssia
n.
con
flue
nce
.
cor
e.
Co
nte
ntE
ntit
yO
bje
ct]
[int
erfa
ce
co
m.
atla
ssia
n.
use
r.
Use
r,
clas
s
jav
a.

lang.String,class com.atlassian.confluence.core.ContentEntityObject]	lang.String,class com.atlassian.confluence.core.ContentEntityObject]	lang.String,class com.atlassian.confluence.core.ContentEntityObject]		
--	all	**Error rendering macro 'page-info'**	--	

Am
big
uou
s
met
hod
ove
rloa
din
g
for
met
hod
jdk.
pro
xy2
41.
$Pr
oxy
349
6#h
asC
ont
ent
Lev
elP
erm
issi
on.
Ca
nno
t
res
olv
e
whi
ch
met
hod

to
inv
oke
for
[nul
l,
clas
s
jav
a.
lan
g.
Stri
ng,
clas
s
co
m.
atla
ssia
n.
con
flue
nce
.
pag
es.
Pag
e]
due
to
ove
rlap
pin
g
prot
oty
pes
bet

we
en:
[int
erfa
ce
co
m.
atla
ssia
n.
con
flue
nce
.
use
r.
Co
nflu
enc
eUs
er,
clas
s
jav
a.
lan
g.
Stri
ng,
clas
s
co
m.
atla
ssia
n.
con
flue
nce

.
cor
e.
Co
nte
ntE
ntit
yO
bje
ct]
[int
erfa
ce
co
m.
atla
ssia
n.
use
r.
Use
r,
clas
s
jav
a.
lan
g.
Stri
ng,
clas
s
co
m.
atla
ssia
n.
con
flue

		nce . cor e. Co nte ntE ntit yO bje ct]		

Document change history.

Legal Notices

Data Privacy

Please also note our data protection declaration at https://www.trenz-electronic.de/en/Data-protection-Privacy

Document Warranty

The material contained in this document is provided “as is” and is subject to being changed at any time without notice. Trenz Electronic does not warrant the accuracy and completeness of the materials in this document. Further, to the maximum extent permitted by applicable law, Trenz Electronic disclaims all warranties, either express or implied, with regard to this document and any information contained herein, including but not limited to the implied warranties of merchantability, fitness for a particular purpose or non infringement of intellectual property. Trenz Electronic shall not be liable for errors or for incidental or consequential damages in connection with the furnishing, use, or performance of this document or of any information contained herein.

Limitation of Liability

In no event will Trenz Electronic, its suppliers, or other third parties mentioned in this document be liable for any damages whatsoever (including, without limitation, those resulting from lost profits, lost data or business interruption) arising out of the use, inability to use, or the results of use of this document, any documents linked to this document, or the materials or information contained at any or all such documents. If your use of the materials or information from this document results in the need for servicing, repair or correction of equipment or data, you assume all costs thereof.

Copyright Notice

Technology Licenses

The hardware / firmware / software described in this document are furnished under a license and may be used /modified / copied only in accordance with the terms of such license.

Environmental Protection

To confront directly with the responsibility toward the environment, the global community and eventually also oneself. Such a resolution should be integral part not only of everybody's life. Also enterprises shall be conscious of their social responsibility and contribute to the preservation of our common living space. That is why Trenz Electronic invests in the protection of our Environment.

REACH, RoHS and WEEE

REACH

Trenz Electronic is a manufacturer and a distributor of electronic products. It is therefore a so called downstream user in the sense of REACH. The products we supply to you are solely non-chemical products (goods). Moreover and under normal and reasonably foreseeable circumstances of application, the goods supplied to you shall not release any substance. For that, Trenz Electronic is obliged to neither register nor to provide safety data sheet. According to present knowledge and to best of our knowledge, no SVHC (Substances of Very High Concern) on the Candidate List are contained in our products. Furthermore, we will immediately and unsolicited inform our customers in compliance with REACH - Article 33 if any substance present in our goods (above a concentration of 0,1 % weight by weight) will be classified as SVHC by the European Chemicals Agency (ECHA).

RoHS

Trenz Electronic GmbH herewith declares that all its products are developed, manufactured and distributed RoHS compliant.

WEEE

Information for users within the European Union in accordance with Directive 2002/96/EC of the European Parliament and of the Council of 27 January 2003 on waste electrical and electronic equipment (WEEE).

Users of electrical and electronic equipment in private households are required not to dispose of waste electrical and electronic equipment as unsorted municipal waste and to collect such waste electrical and electronic equipment separately. By the 13 August 2005, Member States shall have ensured that systems are set up allowing final holders and distributors to return waste electrical and electronic equipment at least free of charge. Member States shall ensure the availability and accessibility of the necessary collection facilities. Separate collection is the precondition to ensure specific treatment and recycling of waste electrical and electronic equipment and is necessary to achieve the chosen level of protection of human health and the environment in the European Union. Consumers have to actively contribute to the success of such collection and the return of waste electrical and electronic equipment. Presence of hazardous substances in electrical and electronic equipment results in potential effects on the environment and human health. The symbol consisting of the crossed-out wheeled bin indicates separate collection for waste electrical and electronic equipment.

Trenz Electronic is registered under WEEE-Reg.-Nr. DE97922676.

Error rendering macro 'page-info'

Ambiguous method overloading for method jdk.proxy241.$Proxy3496#hasContentLevelPermission. Cannot resolve which method to invoke for [null, class java.lang.String, class com.atlassian.confluence.pages.Page] due to overlapping prototypes between: [interface com.atlassian.confluence.user.

ConfluenceUser, class java.lang.String, class com.atlassian.confluence.core.
ContentEntityObject] [interface com.atlassian.user.User, class java.lang.String, class
com.atlassian.confluence.core.ContentEntityObject]